2. OPERATION PROCEDURE

TO M-14P M.S.	TASK CARD No. 401	PAGE (S) 403 - 405	
M.S. ITEM	PROCEDURE: Unpackaging of New Engine		
OPERATIONS AND TECHNICAL REQUIREMENTS		CORRECTIVE ACTIONS	CHECKED BY
1. Prepare the working place, handling equipment, tools.			
2. Inspect the container, packaging, intactness of seals. T.R. Distortion of packaging, damage to container are not allowed.		If packaging defects are detected, draw external inspection statement and send one copy to engine Supplier	
3. Remove seals from the container, unlock and remove the dowel pins which secure the cover to the bottom. CAUTION: WHEN REMOVING THE COVER, TAKE CARE NOT TO DAMAGE THE ENGINE.			
4. Remove the cover from the engine by engaging the hooks with the crane cables.			
5. Remove the slip cover (if provided) or paper packaging from the engine.			
6. Open the airborne tool case and remove paraffined paper from tools. NOTE: The airborne tools are not subject to depreservation.			
7. Open the container.			
8. Check the airborne tools, spares and units against the list.			

OPERATIONS AND TECHNICAL REQUIREMENTS	CORRECTIVE ACTIONS	CHECKED BY
9. Inspect the engine. NOTE: When detecting engine defects, damaged packaging or missing parts, accessories and tools of the engine set, draw the external inspection statement. Send a copy of the statement to the Supplier. 10. Undo three lower bolts which secure the struts to the container. 11. Connect the lifting mechanism cable to the shackle installed on the airscrew shaft. NOTES: 1. Attach the slings according to the diagram shown in Fig. 401. 2. Handling device lifting capacity should be at least 500 kg. CAUTION: WHEN LIFTING THE ENGINE ENSURE AGAINST DAMAGE TO THE ENGINE AND ACCESSORIES. 12. Remove the engine from the container. 13. Install the engine on the support. 14. Secure the engine on the support.		

OPERATIONS AND TECHNICAL REQUIREMENTS	CORRECTIVE ACTIONS	CHECKED BY

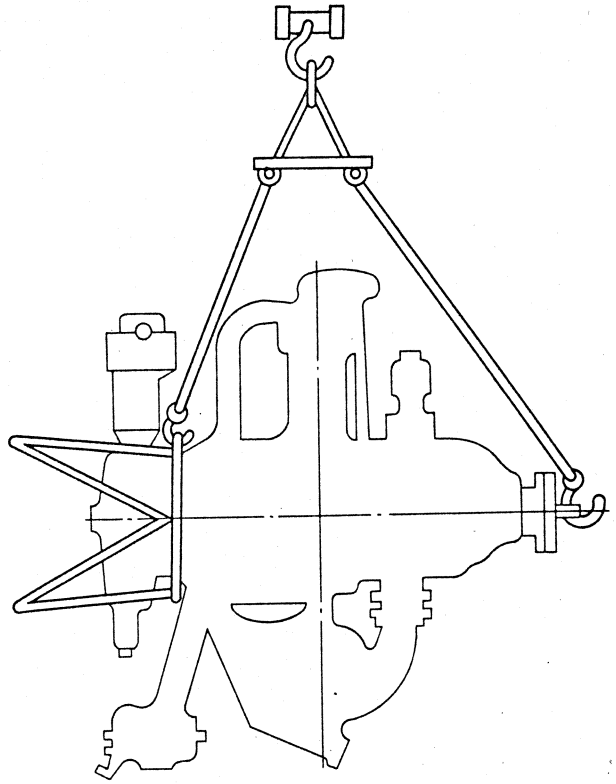

Engine Slinging Diagram

Figure 401

TEST EQUIPMENT	TOOLS AND FIXTURES	MATERIALS
	Cable Crane or hoist at least 500 kg in capacity Hammer 700016 Pliers, flat-nosed 150 Wrench 19x22 700880-7	Gasoline Nefras-S 50/170 or BR-1, BR-2 Brush, hair

TO M-14P M.S.	TASK CARD No. 402	PAGE (S) 407 - 410
M.S. ITEM	PROCEDURE: Depreservation of Engine under Field Conditions	

OPERATIONS AND TECHNICAL REQUIREMENTS	CORRECTIVE ACTIONS	CHECKED BY
1. Place a tray for draining grease under the support with the engine.		
2. Perform external depreservation of the engine and its accessories by removing grease from their surfaces with a hair brush moistened in gasoline Nefras-S 50/170 or BR-1, BR-2. NOTES: 1. It is recommended to depreserve the engine at an ambient temperature of at least 10 °C. 2. In winter or in a cold room the engine should be warmed up to a temperature of 40 °C and be kept at this temperature for at least one hour.		
3. Remove the plug from the tachometer generator drive.		
4. Wash the drive space with a hair brush moistened in gasoline Nefras-S 50/170 or BR-1, BR-2 and blow with dry compressed air.		
5. Install the plug on the drive. CAUTION: 1. AVOID GETTING OF GASOLINE ON IGNITION CABLES, INSIDE THE ENGINE, ON RUBBERIZED FABRIC HOSES OF THE ROD CASINGS, IN THE MAGNETO OR GENERATOR. 2. BEFORE DEPRESERVING THE MAGNETO AND REMOVING THE PLUG FROM THE AIR COMPRESSOR DELIVERY VALVE CONNECTION, IT IS PROHIBITED TO ROTATE THE AIRSCREW SHAFT NOT TO DAMAGE MAGNETO PARTS AND TO CAUSE OPERATION OF THE COMPRESSOR COUPLING.		

OPERATIONS AND TECHNICAL REQUIREMENTS	CORRECTIVE ACTIONS	CHECKED BY
6. Perform internal depreservation of the magneto (Ref. 074.10.01, Task Card No. 201).		
7. Drive out dehydrators and adapters to them from the spark plug holes.		
8. Drive out all plugs from the cylinder exhaust ports.		
9. Inlock and drive out drain plugs from the suction pipes of cylinders Nos 4 through 6, remove covers of the valve mechanism cases of cylinders Nos 3 through 8.		
10. Remove the filter with chip detector (Ref. Task Card No. 250).		
11. Remove the plug from the compressor delivery valve, the lock, mesh, filtering element and the second mesh.		
12. Drain preservation grease from the lower cylinders, valve mechanism cases of cylinders Nos 3 through 8,from the engine crankcase and depreserve the compressor by turning the airscrew shaft clockwise if viewed from the engine front.		
13. Remove grease from the upper and side cylinders: (1) Turn the airscrew shaft and set the piston to the TDC. (2) Collect grease with a syringe. NOTE: Turn the airscrew shaft with a handle bar inserted in the shackle lug, till all grease is removed from the cylinders and compressor cylinder.		
14. Wash the filter with chip detector in clean gasoline Nefras-S 50/170 or BR-1, BR-2.		
15. Keep the filter with chip detector in a special solution (80 % alcohol and 20 % glycerine).		

OPERATIONS AND TECHNICAL REQUIREMENTS	CORRECTIVE ACTIONS	CHECKED BY
16. Blow the filter with chip detector with compressed air.		
17. Reinstall the filter with chip detector (Ref. Task Card No. 250).		
18. Reinstall the spark plugs (Ref. 074.20.02, Task Card No. 202).		
19. Install and lock the drain plugs of suction pipes of cylinders Nos 4 through 6.		
20. Remove the plug from the generator drive.		
21. Wash the generator drive space with clean gasoline.		
22. Unlock and drive out the generator drive plug and drain remaining grease (Ref. Task Card No. 256).		
23. Install the generator on the engine (Ref. 024.30.01, Task Card No. 201).		
24. Install the air compressor filtering element, meshes and spring.		
25. Install plugs on the cylinder exhaust ports.		
26. Perform internal depreservation of the carburetor (Ref. 073.10.03, Task Card No. 202).		
27. Drain oil from the fuel pump interior: (1) Connect a hose of the engine preservation unit filled with clean gasoline B-70 to the inlet connection of the gasoline pump. (2) Create a pressure of 0.15 to 0.25 kgf/cm^2 in the unit. (3) Turn the airscrew shaft till preservation grease is fully removed.		
28. Disconnect the hose from the fuel pump inlet connection.		

OPERATIONS AND TECHNICAL REQUIREMENTS	CORRECTIVE ACTIONS	CHECKED BY
29. Connect the fuel line and fuel pressure measuring pipe to the carburetor. 30. Connect the fuel line to the fuel pump. 31. Tighten and lock all the fuel pump joints. NOTE: Other accessories mounted on the engine are not subject to internal depreservation. 32. Wipe all outer surfaces of the engine and accessories with a clean cloth slightly moistened in clean gasoline Nefras-S 50/170 or BR-1, BR-2. 33. Make an entry on depreservation and indicate the depreservation date in the engine Log Book and in the accessory Certificates.		

TEST EQUIPMENT	TOOLS AND FIXTURES	MATERIALS
	Unit, engine preservation Pliers, flat-nosed 150 Screwdriver 700346 A200x1 Hammer 700016 Wrench 19x22 700880-7 Support, engine Tray for grease draining Wrench 17x19 UB-24-07 Wrench 11x14 14-24-861 Wrench 14x17 14-232-03 Wrench 7x9 700880-2 Syringe UB-24-05 Handle bar 12x350 UB-24-53 Wrench, spark plug 22 15-32-173	Gasoline Nefras-S 50/170 or BR-1, BR-2 Brush, hair Cloths Brush, hair Wire, locking KO-0.8 Air, compressed Mixture, alcohol-glycerine

TO M-14P M.S.	TASK CARD No. 403	PAGE(S) 411 - 414
M.S. ITEM	PROCEDURE: Removal of Engine from Airplane	

OPERATIONS AND TECHNICAL REQUIREMENTS	CORRECTIVE ACTIONS	CHECKED BY
1. Warm up the engine at a speed of 35 to 41 % on gasoline B-70 till the oil inlet temperature is 50 °C (Ref. Task Card No. 202).		
2. Drain oil from the engine (Ref. Task Card No. 244). NOTE: If the engine cannot be warmed up, fill 150 to 200 g of grease K-17 heated to a temperature of 40 to 50 °C to each cylinder through the spark plug holes using a syringe and generously coat the exhaust valve stems and seats with grease K-17.		
3. Remove the airscrew from its shaft (Ref. airscrew Operating Instructions).		
4. Install the protective shackle on the airscrew shaft.		
5. Remove the engine cowling.		
6. Unlock and disconnect the speed governor control rod.		
7. Disconnect the exhaust manifold and the air intake with carburetor inlet air heater and remove them from the engine.		
8. Disconnect the wire from starting coil KP-4716.		
9. Unlock and disconnect the pipelines from the fuel pump, the pipe from the filling system and the pipe from the fuel pressure measuring connection.		
10. Unlock and drive out the pipe from the compressed air distributor, air system pipe from compressor AK-50T.		

OPERATIONS AND TECHNICAL REQUIREMENTS	CORRECTIVE ACTIONS	CHECKED BY
11. Unlock and undo the oil system pipelines.		
12. Disconnect wires from the generator, thermocouple of the cylinder rear spark plug, wires of the tachometer generator.		
13. Unlock and disconnect the carburetor throttle control rod.		
14. Suspend the engine by a hoist on a special cable secured to the shackle and two upper points of the engine frame (Ref. Fig. 401).		
15. Lift the engine so as to relieve studs (5) (Ref. Fig. 402) of engine frame ring (4).		
16. Unlock and undo nuts (2) of the engine frame ring studs.		
17. Drive out the studs by a special drift with an end-piece.		
18. Separate the engine from the airplane by moving the engine forward or the airplane backward. NOTE: When removing the engine, pay attention so that the ignition cable sheath and accessories are not damaged.		
19. Install the engine on the support and secure it.		
20. Preserve the engine (Ref. Section "Storage Instructions").		

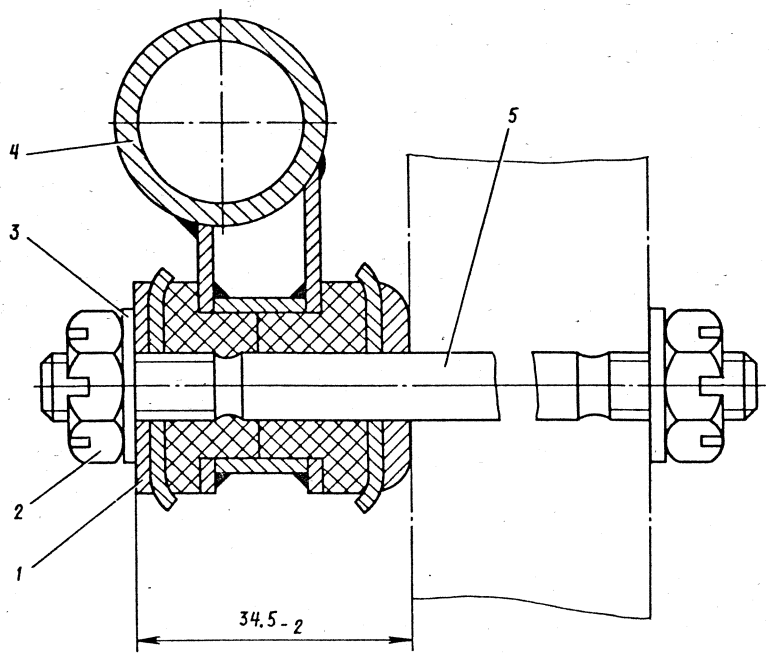

1. Shock-Absorbing Stack Washer
2. Nut
3. Washer
4. Engine Frame Ring
5. Stud

Engine Frame Installation Diagram

Figure 402

OPERATIONS AND TECHNICAL REQUIREMENTS	CORRECTIVE ACTIONS	CHECKED BY

TEST EQUIPMENT	TOOLS AND FIXTURES	MATERIALS
	Crane Hoist Tray for oil draining Shackle, engine mounting Syringe UB-24-05 Wrench 14x17 14-232-03 Pliers, flat-nosed 150 Screwdriver 700345 A150x0.5 Wrench 27x30 7811-0041 Wrench 24x27 700880-8 Wrench 17x19 UB-24-07 Hammer 700016 Wrench 11x14 14-24-861 Wrench, spark plug 22 15-32-173 Wrench 19x22 700880-7	Oil MS-20 Grease K-17 Gasoline Nefras-S 50/170 or BR-1, BR-2

TO M-14P M.S.	TASK CARD No. 404	PAGE(S) 415 - 419
M.S. ITEM 072.00.00	PROCEDURE: Installation of Engine on Airplane	

OPERATIONS AND TECHNICAL REQUIREMENTS	CORRECTIVE ACTIONS	CHECKED BY
1. Unpackage the engine (Ref. Task Card No. 401). 2. Depreserve the engine (Ref. Task Card No. 402). 3. Read the engine Log Book. 4. Lift the engine by a steel cable attached to the shackle mounted on the airscrew shaft and to the engine frame ring (Ref. Figs 401, 402). 5. Remove the shipping braces and brackets, proceeding as follows: (1) Unlock and undo six nuts (2) (Ref. Fig. 402) for attachment of three shipping brackets installed on the ring of the engine frame. (2) Remove the shipping brackets with braces. (3) Install six washers (1) and (3) to each stud of the engine frame ring instead of the shipping brackets. NOTE: The washers and cotterpins are suspended from the engine frame ring. (4) Install six nuts (2) on the studs. (5) Tighten the nuts so that a shock-absorbing stack (34.5_{-2}) mm thick is obtained and cotterpin the nuts. NOTES: 1. Preserve all the removed parts with grease, wrap with paraffined paper and pack in the generator container. 2. Prior to sending the engine for repair, reinstall the removed shipping brackets.		

OPERATIONS AND TECHNICAL REQUIREMENTS	CORRECTIVE ACTIONS	CHECKED BY
6. Install the engine on the airplane: (1) Install the airplane braces on the engine frame ring. (2) Bring the engine with braces to the airplane. (3) Insert four brace-to-airplane attachment bolts having made sure they are intact. (4) Install the washers. Screw on and uniformly tighten the nuts; cotterpin them.		
7. Install the airscrew pitch control brackets on the engine, using the following procedure: (1) Undo the gearbox-to-intermediate crackcase attachment nuts near the airscrew pitch control brackets and two nuts for attachment of the R-2, series 04 speed governor. (2) Install the airscrew pitch control brackets on the studs, place spring washers, install and tighten the attachment nuts of the gearbox and R-2, series 04 speed governor. NOTE: Tighten the nuts for attachment of the gearbox to the intermediate crankcase and fastening the airscrew pitch control brackets with a torque wrench 14-024-260 with socket 14-324-06. Tightening torque is $(1.5^{+0.3})$ kgf·cm.		
8. Install the airplane lever on the control shaft of the R-2, series 04 speed governor to which end: (1) Undo the nut and remove the washer from the governor control shaft. (2) Install the lever and washer on the governor control shaft. (3) Install and tighten the nut, lock it with a cotter pin.		
9. Connect the oil, fuel and air lines with the respective connections on the engine and lock them.		

OPERATIONS AND TECHNICAL REQUIREMENTS	CORRECTIVE ACTIONS	CHECKED BY
10. Connect the pipes to the oil and fuel pressure transmitters.		
11. Lock the pipes.		
12. Connect and lock the control rods of the carburetor, speed governor, cowling shutters.		
13. Connect primary circuits of both magnetos with the selector switch. Connect the high-tension wire from starting coil KP-4716 to jack S (starting) of the LH magneto distributor.		
14. Install the tachometer generator.		
15. Install the temperature pickup for measuring the engine inlet oil temperature.		
16. Connect wires to the generator.		
17. Cut in the filter with chip detector to the electric circuit.		
18. Install thermocouples under rear spark plugs of cylinders Nos 2 and 6 and connect by thermocouple wires according to the airplane Operating Instructions.		
19. Connect ignition cables to the spark plugs (Ref. 074.20.02, Task Card No. 202).		
20. Remove the plug from the carburetor lower flange.		
21. Install the mesh on the carburetor lower flange.		
22. Install and secure the air intake pipe with air heater at the carburetor inlet.		

OPERATIONS AND TECHNICAL REQUIREMENTS	CORRECTIVE ACTIONS	CHECKED BY
23. Remove plugs from the exhaust ports of all the cylinders.		
24. Install the exhaust manifold having coated thread of its nuts with grease ST (NK-50).		
25. Install the airscrew on its shaft (Ref. airscrew Operating Instructions).		
26. Fill the airplane with fuel, oil, air.		
27. Prepare the engine for starting (Ref. Task Card No. 201).		
28. Start the engine (Ref. Task Card No. 201).		
29. Run the engine at a speed of 24 to 44 % for 10 to 15 min till the engine inlet oil temperature rises to at least 40 °C.		
30. Shut down the engine (Ref. Task Card No. 203).		
31. Drain oil from the tank and engine (Ref. Task Card No. 244).		
32. Check joints for leakage. T.R. Leaky joints are not allowed.	Detect and eliminate cause of leakage	
33. Remove the oil sump filter with chip detector and the rear cover oil filter.		
34. Inspect and wash the filters. T.R. Damage to filters is not allowed. Metal particles in oil are not allowed.	Replace damaged filter Detect and eliminate cause of metal particles getting into oil	

OPERATIONS AND TECHNICAL REQUIREMENTS	CORRECTIVE ACTIONS	CHECKED BY
35. Install and lock the filter with chip detector and the rear cover oil filter. 36. Fill fresh oil. NOTE: Do not re-use or recycle the drained oil. 37. Check presence of locking on the nuts of connections, pipelines, drain cocks and plugs.		

TEST EQUIPMENT	TOOLS AND FIXTURES	MATERIALS
	Syringe UB-24-05 Wrench 14x17 14-232-03 Pliers, flat-nosed 150 Screwdriver 700345 A150x0.5 Crane Hoist Tray for oil draining Wrench 27x30 7811-0041 Wrench 24x27 700880-8 Wrench 17x19 UB-24-07 Shackle, engine mounting Hammer 700016 Wrench 11x14 14-24-861 Wrench, spark plug 22 15-32-173 Wrench 19x22 700880-7 Wrench 14-024-260 Set of sockets	Oil MS-20 Alcohol, rectified Cloths Grease ST (NK-50) Paper, paraffined Twine Gasoline Nefras-S 50/170 or BR-1, BR-2

ENGINE M-14P - STORAGE INSTRUCTIONS

1. MATERIALS AND CONTAINERS USED FOR PRESERVING ENGINE

To preserve the engines which are temporarily withdrawn from service and their spares, use is made of the following compounds:

Aviation oil MS-20 for internal preservation of the engine and accessories for up to 30 days, the carburetor and fuel pump, for up to 6 years.

Gun grease (neutral dehydrated) or grease PVK for internal preservation of the magneto and external preservation of the fuel fine filter for up to 6 years.

Preservation oil K-17 for internal and external preservation of the engine and accessories, except the carburetor and fuel pump for a period of 60 and 90 days, one year and six years.

CAUTION: 1. NEVER PRESERVE THE CARBURETOR AND FUEL PUMP INTERIOR WITH PRESERVATION OIL K-17.

2. GREASES USED FOR PRESERVATION, GASOLINE AND PARAFFINED PAPER SHOULD BE REGULARLY CHECKED FOR FITNESS IN THE LABORATORY.

3. TO FULLY REMOVE MOISTURE, HEAT GUN GREASE AND GREASE PVK BEFORE USE TO 110 TO 120 °C TILL FOAMING CEASES.

When preserving the engine it is allowed to replace the above-listed greases, with greases produced under specifications of British and US companies (Ref. Table 901).

Table 901

Description of grease		
USSR	England	USA
Aviation oil MS-20 GOST 21743-76	B/O DEngRD-2472 (1950)	1100 MiL-L-6082B (1955)
Gun grease GOST 19537-74	Shell Otina compound	-
Preservation oil K-17 GOST 10877-76	Shell Ensis compound	AN-VV-576

Engine M-14P is delivered in a wooden container comprising a bottom and a detachable cover. The overall dimensions of the packaging container are 1350x1250x1360 mm.

The engine is attached to the container bottom by braces and shipping brackets installed on the engine frame. All fasteners are painted red and should be removed when installing the engine on the airplane.

The generator, individual engine and accessory SPTA set, case with airborne tools and fuel fine filter are packaged in separate boxes attached to the engine container bottom.

2. PRESERVATION AND STORAGE OF ENGINE INSTALLED ON AIRPLANE

2.1. STORAGE OF ENGINE INSTALLED ON AIRPLANE

(1) The airplane with engines installed may be stored both in hangars and on the airfields. In both cases the engine should be subject to anticorrosion treatment depending on the expected dead period.

(2) If a prolonged dead period of the engine is expected, the engine should be preserved not later than in seven days of parking depending on the predicted interval by one of the methods indicated below.

CAUTION: NEVER PRESERVE THE ENGINE IN RAIN OR SNOW.

(3) When storing the airplane with engine installed outdoors, tightly cover the engine to protect against snow, rain and dust.

(4) Mark the preservation date and cases of detection of corrosion in the engine Log Book and accessory Certificates.

2.2. PRESERVATION OF ENGINE INSTALLED ON AIRPLANE FOR PERIOD OF UP TO 20 DAYS

(1) Start and warm up the engine (Ref. Task Card No. 201).

(2) Run the engine for 10 to 15 min at a speed of 35 to 41 % (1000 to 1200 r/min) on gasoline B-70 with 10 % oil MS-20 and on oil used to operate it.

(3) Stop the engine and cool it down to the cylinder head temperature of 30 to 40 °C.

(4) Drive out the front spark plugs.

Turn the airscrew shaft for 8 to 10 turns with the carburetor throttle fully open to scavenge the cylinders of exhaust gases.

(5) Fill 70 to 100 g of clean dehydrated oil MS-20 heated to 60 to 80 °C or 70 to 100 g of preservation oil K-17 heated to 40 °C with the piston at the TDC through the spark plug holes of each cylinder using a syringe. Turn the airscrew for 1 to 2 turns. Reinstall the spark plugs.

(6) Wipe the engine outer surfaces with a clean cloth (or rags) moistened in gasoline Nefras-S 50/170 or BR-1, BR-2, clean the rubberized fabric hoses with a clean dry cloth.

(7) At above-zero ambient temperature, turn the airscrew shaft 6 to 8 turns each 10 days with the carburetor throttle fully opened.

(8) If the dead period exceeds 20 days, represerve the engine according to Items 1 through 7.

(9) The engine preserved for 20 days is not subject to depreservation.

NOTE: It is allowed to perform up to three represervation cycles after which the engine should be preserved for a storage period of 30 or 90 days.

2.3. PRESERVATION AND DEPRESERVATION OF ENGINE INSTALLED ON AIRPLANE FOR STORAGE PERIOD OF UP TO 30 DAYS

(1) Start and warm up the engine (Ref. Task Card No. 201).

(2) Stop the engine, drain oil from the oil tank and engine immediately after shutdown. Fill the oil tank with fresh oil, the fuel tank with gasoline B-70 with 10 % oil MS-20.

(3) Start the engine and run it for 10 to 15 min at a speed of 35 to 41 % (1000 to 1200 r/min).

(4) Stop the engine, cool it down to a cylinder head temperature of 30 to 40 °C.

(5) Drive out the front spark plugs. Disconnect the pipe from the compressor delivery valve connection. Remove the spring lock, mesh, filtering element, second mesh. Fill clean oil MS-20 heated to a temperature of 60 to 80 °C through the suction valve of the compressor, turning the airscrew shaft simultaneously till oil emerges from the delivery valve.

(6) Using a syringe fill 70 to 100 g of clean dehydrated oil MS-20 heated to a temperature of 60 to 80 °C or 70 to 100 g of preservation oil K-17 heated to a temperature of 40 °C into each cylinder through the spark plug holes with the piston at the BDC; lubricate the seats and heads of the exhaust valves, turn the airscrew shaft for 2 to 3 turns. Reinstall the mesh, filtering element, second mesh, spring lock of the compressor. Connect the pipe of the delivery valve connection of the compressor.

(7) Again fill 70 to 100 g of clean dehydrated oil MS-20 heated to a temperature of 60 to 80 °C or 70 to 100 g of preservation oil K-17 heated to a temperature of 40 °C into each cylinder using a syringe without turning the airscrew shaft.

(8) Perform internal preservation of the fine fuel filter with pipelines disconnected by filling or forcing oil MS-20 heated to a temperature of 60 to 70 °C till the interior spaces are filled and air bubbles are removed. Drain oil from the interior. Connect the pipelines.

(9) Preserve the carburetor, using the following procedure:

(a) Set the carburetor throttle lever to the full-open stop.

(b) Drive out plug (3) (Ref. 073.10.03, Fig. 202) of the automatic mixture control and drain plug (2) (Ref. 073.10.03, Fig. 201).

(c) Disconnect the pipelines from connection (6) for feeding fuel to the carburetor and from connection (7) for measuring fuel pressure at the carburetor inlet.

(d) Screw a shipping cap on connection (7) and connect to connection (6) a hand pump pipe filled with oil MS-20 heated to a temperature of 60 to 70 °C.

(e) Open the fuel valve by unscrewing plug (6) (Ref. 073.10.03, Fig. 202) for measuring air pressure in the governor air space and supply air at a pressure of 0.3 to 0.5 kgf/cm^2.

(f) Flush the carburetor with oil heated to a temperature of 60 to 70 °C at a pressure of 0.2 to 0.5 kgf/cm^2 till it appears in the hole for plug (2), install the plug and keep on pumping till oil emerges from the hole of plug (3), install this plug and keep on pumping till oil appears in emulsion holes of the nozzle.

(g) Stop pumping as soon as oil starts flowing from the nozzle holes and perform two or three energetic turns of the throttle lever from stop to stop.

(h) Drive out the pipe from connection (6) (Ref. 073.10.03, Fig. 201), remove the cap from connection (7), drive out lower drain plug (5) (Ref. 073.10.03, Fig. 202) and upper drain plug (2) (Ref. 073.10.03, Fig. 201) and drain oil from the carburetor through the open holes.

(i) Reinstall the plugs, connect fuel pipes to connections (6) and (7) and lock the plugs and nipples with wire.

(10) Wipe the engine outer surfaces with a clean cloth (or rags) moistened in gasoline Nefras-S 50/170 or BR-1, BR-2 and the rubberized fabric hoses with a clean dry cloth.

(11) Carefully inspect the engine externally, dress corrosion and coat with preservation oil K-17.

(12) Coat the outer surfaces of the engine and accessories which have no paint coating with preservation oil K-17.

(13) In case of prolonged dead periods, preserve the engine each month for up to two times, then perform preservation for a storage period of 90 days.

(14) Prior to starting the engines preserved for a period of 30 days, depreserve them using the following procedure:

(a) Drain oil from the lower cylinders and remove oil from cylinders Nos 1, 2, 3, 7, 8, 4 and 9 through spark plug holes using a syringe.

(b) Depreserve the compressor (Ref. 080.00.00, Task Card No. 202) having disconnected the air pipe from the delivery valve.

CAUTION: 1. WHEN PRESERVING AND DEPRESERVING THE CARBURETOR, PROTECT BREATHER HOLE IN PLUG (4) AGAINST CLOGGING WITH GREASE (REF. 073.10.03, FIG. 202).

2. DO NOT CRANK THE ENGINE BEFORE DEPRESERVING THE COMPRESSOR.

(c) Depreserve the carburetor (Ref. 073.10.03, Task No. 202). When depreserving the engine, crank it to fully remove preservation grease from the compressor interior.

(d) Wipe the engine externally dry with a cloth moistened in gasoline Nefras-S 50/170 or BR-1, BR-2 and blow with compressed air; ensure against getting of gasoline and oil into the magneto and generator interior.

(e) Start and test run the engine (Ref. Task Card No. 201):

2.4. PRESERVATION AND DEPRESERVATION OF ENGINE INSTALLED ON AIRPLANE FOR STORAGE PERIOD OF UP TO 90 DAYS

(1) Carry out operations under Items 2.3(1) through 2.3(5).

(2) Drain oil from the engine and oil tank, drain gasoline from the tank and carburetor.

(3) Fill 3 to 4 lit of clean dehydrated preservation oil K-17 into the engine crankcase through the rear breather and turn the airscrew shaft through 8 to 10 turns.

(4) Using a syringe, fill 70 to 100 g of oil K-17 heated to a temperature of 40 °C through the spark plug holes into each cylinder with the piston in the BDC, lubricate the seats, stems and mushroom heads of the exhaust valves with oil K-17, turn the airscrew shaft for 2 to 3 turns.

(5) Again fill 70 to 100 g of oil K-17 heated to a temperature of 40 °C into each cylinder through the spark plug holes using a syringe; do not turn the airscrew shaft. Reinstall the spark plugs and delivery valve pipe of the compressor.

(6) Preserve the carburetor as instructed under Items 2.3(9) and 2.3 (12).

(7) Preserve the fine fuel filter according to Item 2.3(8).

(8) Perform external preservation of the filter non-painted surface with gun grease heated to a temperature of 105 to 110 °C. Apply grease with a brush.

(9) Wipe the engine outer surfaces with a clean cloth (or rags) moistened in gasoline Nefras-S 50/170 or BR-1, BR-2 and the rubberized fabric hoses with a clean dry cloth.

(10) Carefully inspect the engine externally, dress corrosion with sandpaper No. 170 or 230 and coat with preservation oil K-17.

(11) Coat the non-painted outer parts of the engine and accessories with oil K-17. Close the exhaust pipe (or manifold) holes with polyethylene film, install shipping covers on breather holes.

(12) On expiration of the preservation term the engine may be preserved again for a storage period of from 20 to 90 days. Depreserve the engine before represervation.

For represervation, remove the airscrew from the engine, wash the airscrew shaft end and the airscrew hub assembly with gasoline Nefras-S 50/170 or BR-1, BR-2; remove corrosion, carefully wipe, coat with gun grease and reinstall the airscrew.

(13) To depreserve the engine, proceed as follows:

(a) Wipe the engine exterior dry with a cloth moistened in gasoline Nefras-S 50/170 or BR-1, BR-2 and blow with compressed air.

(b) Drive out spark plugs from all the cylinders and plugs of the intake pipes of cylinders Nos 4 through 6 and drain grease from the lower cylinders, turning the airscrew shaft for 8 to 10 turns; remove oil from cylinders Nos 1, 2, 3, 7, 8 and 9 using a syringe.

At an ambient temperature below 10 °C, drain oil after heating the engine.

(c) Depreserve the compressor (Ref. 080.00.00, Task Card No. 202). Carry out this operation simultaneously with operations under Item 2.4(13)(b).

(d) Depreserve the carburetor (Ref. 073.10.03, Task Card No. 202).

(14) Repeat preservation of the engine for a period of 90 days only once. On expiration of the second preservation term, fully depreserve the engine and test run it for 30 min at all ratings after which preserve the engine again for the required storage period.

<u>NOTE</u>: If oil sprayer 77MR-1, preservation tanks 77BK-1, engine oil flushing unit 77PD-1 are available at the User's, it is recommended to preserve the engine with the aid of this equipment in accordance with the Instructions.

228

3. PRESERVATION OF ENGINE FOR STORAGE PERIOD OF UP TO ONE YEAR

Subject to preservation for a storage period of up to one year are the engines removed from the airplane and directed to prolonged storage or for repair.

(1) Prior to removing the engine from the airplane, carry out operations indicated in Items 2.3(1) through 2.3(4) for preserving the engine for a storage period of up to 30 days.

(2) Drain oil from the engine and oil tank (Ref. Task Card No. 244).

(3) Remove the engine from the airplane and arrange it on the support (Ref. Task Card No. 403).

(4) Remove the generator from the engine and install a blanking cover in its place (Ref. 024.30.01, Task Card No. 201).

(5) Fill preservation oil K-17 heated to a temperature of 40 °C into the engine crankcase through the rear breather hole till oil appears in the front breather hole. Install auxiliary covers on the flanges of the front and rear breather holes.

(6) Fill oil MS-20 heated to a temperature of 60 to 80 °C into the fuel pump through the fuel supply connection and turn the airscrew shaft till it appears in the outlet connection.

(7) Using a syringe, fill 60 g of oil K-17 heated to a temperature of 40 °C in the compressed air distributor through the air supply connection, turning the airscrew shaft through 3 to 4 turns.

(8) Preserve the compressor as follows:

(a) Remove the spring lock, mesh, filter and the second mesh.

(b) Charge oil K-17 heated to a temperature of 40 °C through the suction valve turning the airscrew till oil appears in the delivery valve connection.

(9) Remove excessive grease from the fuel pump and compressor interior, to which end turn the airscrew shaft for 3 to 4 turns. Install the mesh, filter, the second mesh and the spring lock after accomplishing operations under Item 3(12).

(10) Perform internal preservation of the carburetor as instructed under Item 2.3(9).

(11) Remove the valve case covers, apply preservation oil K-17 heated to a temperature of 40 °C to the valve springs, cylinder exhaust ports, mushroom heads and stems of the valves.

(12) Using a syringe, fill 150 to 200 g of oil K-17 heated to a temperature of 40 °C into each cylinder through the spark plug holes with the piston being at the BDC turning the airscrew shaft for 3 to 4 turns, then refill the oil into the cylinders without turning the airscrew shaft. Fill the oil using a syringe with a special tip. Turn the shaft with the compressor inlet valve being depressed.

(13) Drain oil K-17 from the engine crankcase through the oil sump drain cock.

(14) Remove excessive oil from the cylinders through the spark plug holes using a syringe, then drive plugs or spark plugs into the spark plug holes.

Install covers with paraffined paper gaskets on the cylinder exhaust ports.

(15) Install caps on the fuel pump connections and stop the compressor delivery valve.

(16) Preserve the magneto internally using the following procedure:

(a) Drive out four pipe attachment screws, remove the shield and distributor taking care not to damage the high-tension terminal socket and the central electrode.

(b) Clean the cam, coupling bolt crown nuts, breaker mechanism parts of soil. Clean these parts with chamois or coarse calico cloth slightly moistened in clean alcohol.

(c) Wrap the cam profile working surface with one layer of calico or tafetta tape, (16±2) mm wide, (140±2) mm long, 0.2 to 0.3 mm thick, impregnated with gun grease or grease PVK heated to a temperature of 105 to 110 °C.

(d) Using a brush, coat the breaker spring and arm with a thin layer of turbine oil T22, avoiding runs.

CAUTION: AFTER INSTALLING THE COVER ON THE COMPRESSOR DELIVERY VALVE AND PRESERVING THE MAGNETO, NEVER TURN THE ENGINE AIRSCREW SHAFT.

(e) Reinstall the removed parts, seeing to it that the distributor, high-tension terminal socket, central electrode and the shield are properly arranged.

(17) Preserve the generator, using the following procedure:

(a) Wash the generator shank and flange with gasoline Nefras-S 50/170 or BR-1, BR-2.

(b) Make sure there are not traces of corrosion. If corrosion is detected, remove it with sandpaper No. 230 moistened in oil.

(c) Lubricate the casing, shank, flange, heads of screws and bolts securing pole shoes and terminals with oil K-17, avoiding getting of lubricant inside the generator.

(d) Wrap the generator in paraffined paper and pack in a separate box.

(18) Remove the engine from the support, place it on the bottom of the packaging container and secure by braces using the following procedure:

(a) Uncotterpin and undo six nuts (2) (Ref. Fig. 402) of the engine frame ring.

(b) Remove six washers (3) and (1) each.

(c) Install three shipping brackets instead of the removed washers.

(d) Install six nuts (2) on the engine frame studs, tighten and cotterpin them.

(e) Install the braces and secure them to the container bottom.

(19) Perform external preservation of the engine and its accessories using the following procedure:

(a) Wipe the engine with a cloth moistened in gasoline Nefras-S 50/170 or BR-1, BR-2 and blow with compressed air. See to it that gasoline does not get inside the engine, in the thrust bearing and rubberized fabric hoses of the tappet rod casings.

(b) Inspect the engine and touch up having degreased the damaged paintwork spots with gasoline. Use a spray gun or a brush to touch up.

NOTES: 1. Touch up the damaged engine surfaces painted khaki with epoxy enamel EP-140, the surfaces painted black, with black nitrocellulose varnish NTs-286. To obtain the required color it is allowed to add up to 30 % black enamel PF-163 to nitrocellulose varnish NTs-286.

2. Touch up the silver color accessories with aluminium powder nitrocellulose varnish.

3. Dry the engine after touch up for 30 to 60 min at a temperature of 10 to 30 °C, protecting the touched up areas against grease at external preservation of the engine.

(c) Remove the fine fuel filter and its pipelines from the airplane. Perform internal preservation of the filter with oil MS-20 heated to a temperature of 60 to 70 °C. Do not subject the fine fuel filter to external preservation.

(d) Coat non-painted steel parts of the engine and its accessories with oil K-17 (the painted parts may be left unpreserved).

(e) Generously coat the airscrew shaft end with oil K-17, attach the shackle to it, wrap with two or three layers of paraffined paper and fix with twine.

(20) Wrap the engine with 2 or 3 layers of paraffined paper, secure with twine which should not touch the unpreserved places.

(21) Preserve the engine spares (except for gaskets and rubber parts) and airborne tools with oil K-17 at a room temperature. Wrap the preserved spares in paraffined paper, prepare the box for packaging, insert spares into it and secure the box cover.

(22) Package the airborne tools into the case using the following procedure:

(a) Carefully inspect the case, clean it of soil by blowing with dry clean compressed air or wipe with clean dry cloths.

(b) Place the airborne tools into the case. The tools should be securely fixed in the clamps.

NOTE: Never touch the tools with ungloved hands.

(c) Dry the case with airborne tools with dry compressed air passed through the oil/moisture separator heated to a temperature of 60 °C and dried to a dew point of not above minus 20 °C.

(d) Insert the first bag with silica-gel dehydrator, grade KSMG and ShSMG (500 g) with up to 2 % moisture in the case.

(e) Place the airborne tool list in the case, close and seal the latter. The locks should be positively fixed.

(f) Wrap the case with two layers of paraffined paper and fix with twine. Wrap the handles with paper and tie with twine additionally.

(g) Secure the second bag with silica-gel dehydrator (500 g) and the silica-gel indicator cartridge to the case by Mac-Key threads folded six or with twine.

(h) Make a cover of polyethylene film.

(i) Place the case in the cover and fuse its edges. Evacuate air from the cover through the valve so that the cover presses to the case and ensure tightness of the valve.

Accurately position the case in the packaging box and close the box cover.

(j) Store and check condition of the silica-gel indicator as instructed in Section 8.

(23) Enter the preservation date, operation description, preservation term, name of person in charge of preservation and place of preservation in the engine Log Book and accessory Certificate.

(24) Install and secure the individual SPTA set box and airborne tool case on the bottom of the packaging box.

(25) Insert the engine Log Book, accessory Certificates and engine Packaging List in a special box.

(26) Close the engine with the packaging container cover, secure the cover to the bottom by four dowel pins and seal it (the packaging container should be cleaned of dust and soil beforehand). Erase inscriptions which do not pertain to the given engine and apply new ones.

(27) Send the engine to the addresses.

4. REMOVAL OF CORROSION FROM ENGINE PARTS

Preserve the engine for prolonged storage only after removing corrosion from parts.

(1) Remove corrosion from steel parts with sandpaper No. 170 or 230 moistened in oil MS-20 and polish with paste GOI.

After polishing the surface, wipe it with a clean cloth moistened in gasoline, then with dry cloth and coat with preservation grease, selected depending on the preservation term (Ref. Table 901).

(2) Remove corrosion from aluminium parts by a scraper, then dress the area with powdered pumice or sandpaper not coarser than No. 230; wipe the parts with a cloth moistened in gasoline, then with a dry cloth and paint the matching color or coat with preservation grease.

(3) Corrosion spreads quickly on magnesium alloy parts; therefore, immediately dress the affected areas with a scraper, then with sandpaper not coarser than No. 230, wash with gasoline and wipe dry.

Oxidize the dressed magnesium alloy parts.

It is recommended to oxidize the parts at a room temperature in the solution of the following formula:

Selenic acid ..... 20 g

Sodium bichromate ..... 10 g

Water ..... 1000 ml

Exposure - 1 to 2 min.

If the parts cannot be removed from the engine, they may be oxidized by lightly rubbing with cotton wool moistened in the solution. After oxidizing the magnesium alloy parts, dry them blowing with clean dry air and paint the matching color or coat with preservation grease.

5. LOADING OF DEHYDRATOR CARTRIDGE WITH SILICA-GEL INDICATOR

(1) To load the dehydrator cartridge with silica-gel indicator, use the following procedure:

(a) Insert a disk of filtering paper inside the dehydrator cartridge onto its perforated bottom.

(b) Wrap the perforated bottom of the dehydrator cartridge in polyethylene film and secure with a rubber ring.

(c) Fill the cartridge with silica-gel indicator.

(d) Glue the cartridge cover to its body by 2 to 3 % solution of polystyrene in dichloroethane.

(2) Prepare the adhesive by dissolving crushed polystyrene in organic solvent dichloroethane (2 to 3 % polystyrene, 97 to 98 % dichloroethane).

Keep ready adhesive in a glass ware with ground plug.

The adhesive shelf life is one month.

(3) Keep the loaded cartridge in the cartridge loading room for 10 to 15 min, place in sets in polyethylene film bags and fuse the latter. The storage term is up to 3 days.

6. REQUIREMENTS FOR PRESERVATION/DEPRESERVATION ROOM

The room temperature should be from 10 to 30 °C.

The room should be dried, heated and well ventilated. Room air relative humidity should be from 45 to 70 %.

Avoid sharp fluctuations of temperature and humidity. Temperature fluctuations should not exceed 6 °C. The room floor should be of painted timber, tiles or xylolite.

Earthen and cement floors are not allowed.

It is strictly prohibited to store corrosive materials in the room: acids, alkalis, salts and other chemicals, storage batteries and rubber items.

Keep the room clean. Sweep the floors using wet sawdust or a vacuum cleaner.

When preserving and packaging the engine, the personnel should wear clean overcoats, knitted or cotton gloves and use cloths.

7. REQUIREMENTS FOR STOREROOMS

Storeroom for the engine, accessories and spares should be dry, ventilated and heated.

The room air temperature should be from 10 to 30 °C, relative humidity from 45 to 70 %. Sharp fluctuations of temperature and humidity are not allowed.

Temperature fluctuations during 24 h should not exceed 6 °C.

Determine temperature and relative humidity each morning and evening. Enter the data into a Register.

The storeroom floors should be of painted timber, xylolite, tiles or asphalt. Cement and earthen floors are not allowed.

The racks for spare parts should be made of timer with a moisture content of up to 18 %.

The shelves of timber and metal racks should be painted with oil paint and kept clean.

The racks should be so arranged that the distance from the rack lower shelf to the floor and wall is at least 400 mm.

The racks should be closed with light fabric curtains to protect the spares against dust and sun rays.

Room cleaning should preclude dusting, the shelves should be wiped with slightly oiled cloth, the floor should be swept with wet sawdust or be cleaned with a vacuum cleaner.

NEVER sweep the dry floor or pour or sprinkle it with water.

The storeroom should be separated from the external yard with a tambour.

The items to be stored should be unloaded and loaded in the tambour or at sheltered grounds.

Unloading at open grounds is strictly prohibited.

Storage of engines and spares in the tambour is strictly prohibited.

A special room separated from the other storage area with a solid partition should be provided behind the tambour in the storage area.

The incoming engines, accessories and spares should be kept to gain the room temperature. Engines, accessories and spares should be unpackaged, packaged and treated in this room.

As regards humidity, temperature and equipment, this room should meet the requirements of storerooms.

The storeroom for the engine, accessories and spares should be absolutely isolated against various gases (smoke, chemical plant flue gases, sulfur oxide, ammonia, chlorine, etc.).

It is prohibited to store chemicals, acids, alkalis, storage batteries and hygroscopic materials (cotton, paper, rags, etc.) in one room with the engines and spares.

8. STORAGE OF ENGINE AND SPARES AT DEPOTS

Mark the time of arrival of the engine, the date and term of original preservation (to be taken from the engine Log Book) in the Register.

Keep boxes with spares in a separate pile (in set with engines); indicate the time of arrival, date and term of original preservation on the pile.

Spares delivered by the Supplier are preserved for a term indicated in the accompanying documents. This term is effective provided the Supplier's preservation is completely intact, therefore the boxes should not be open throughout this term unless urgently necessary.

Cured parts should be stored only packed.

NOTE: When sending the spares from depot, it is not recommended to violate the Supplier's preservation. It is recommended to check the package contents against the Data Sheets which should indicate the part Nos and their quantities in the package.

The engine preserved for one year may be stored unpackaging, covered with a tight fabric cover on supports allowing external inspection and lubrication.

The supports should be made of wood with a moisture content of up to 18 % and painted at points of contact with the engine. Besides, these points should be lined with paraffined paper.

Individual SPTA sets for the engine should be stored on supports so that the distance from the box base to the floor is at least 400 mm.

It is strictly prohibited to keep any items directly on the floor.

When transporting from depots, the items should be protected against precipitation (snow, rain).

Systematic inspections should be carried out for the engine and spares kept in the storeroom.

The storeroom should have a special Register for recording the procedure and terms of inspection of the engine and spares.

Besides, each unit should have a tag reading the date of the last inspection and the date of the next one as well as the name of person in charge of its condition and inspection.

All operations relating to the engine should be also entered into its Log Book, in addition to the Register and tag.

When keeping the engine packaged for one-year storage, subject it to inspection once in six months using the following procedure:

(a) Make sure through the spark plug holes that grease is present on the cylinder sleeves and there is no corrosion.

(b) Make sure the airscrew shaft splines are free of corrosion.

(c) Remove covers from the exhaust ports and check condition of the valves.

When storing the engine packaged for 4-year storage, inspect it through the film every month throughout the storage period.

If silica-gel indicator turns pink, proceed as follows:

(a) Cut the cover upper seams (near the edge) with scissors.

(b) Carefully roll out the cover.

(c) If the silica gel in cartridges is pink, drive out the cartridges and make sure the cylinder sleeves are greased; use an electric lamp for the purpose.

Replace dehydrator cartridges with pinky silica-gel indicator with new cartridges loaded with blue silica-gel indicator.

(d) If silica gel in the indicator or check cartridges turned pinky, replace all silica-gel dehydrator and silica-gel indicator.

(e) Wrap with paraffined paper the engine parts that were wrapped originally with paper.

(f) Close the engine with the same cover, evacuate air and fuse it.

Never touch metal parts with ungloved hands. Never take the metal parts by painted or dressed surfaces (chrome-plated, varnished or cadmium-plated, etc.). If this cannot be avoided, use knitted gloves or appropriate appliances (tongs, etc.), oiled rags or tight paper (waxed, paraffined, etc.).

On expiration of every six months after original preservation, open the individual SPTA set boxes and inspect the parts using the following procedure:

Make sure, without touching by hands or damaging the grease coat, that there is no corrosion under the grease coat. If no corrosion traces are detected, wrap the parts in paper again and place in the boxes.

When inspecting, do not remove the parts from paper, only unwrap them and inspect, carefully turning on paper.

If spares in the opened boxes are in satisfactory condition, do not open other boxes with the same date of original preservation.

If random inspection detects heavy corrosion which precludes further storage of parts, draw a bilateral statement and submit a claim to the Supplier.

After drawing the bilateral statement, depreserve all the SPTA sets of the same original preservation date as the set where corrosion was detected. Depreservation consists in washing with clean gasoline to fully remove grease.

After eliminating corrosion, the parts are washed, inspected, dried, preserved and packaged. The parts free of corrosion are represerved and packaged.

When corrosion is detected on engine parts before the guaranteed storage term and is the fault of the Supplier, the latter must restore or replace the corroded parts and perform represervation by his labour and at his expense after the Customer presents the bilateral statement to the Supplier.

Perform in-storage depreservation and preservation of the engine and renew protective grease on parts, whenever necessary according to the present Manual.

All greases and oils used for preserving the engine and spares should be stored in a special depot in a sealed container with grease Certificate.

NEVER store greases and oil at unsheltered outdoors grounds.

Greases and oils should fully meet the specifications. It is prohibited to use greases and oils without preliminary chemical tests.

Prior to use, the preservation greases should be subject to a repeated analysis for acidity and moisture content. Enter the analysis results in a special Register.

After partial usage of grease or oil, apply seals to baths with grease and oil and special vessels (flasks).

The vessels intended to carry greases and oils should be absolutely clean and dry.

To avoid ingress of water and foreign admixtures, the vessels should be tightly closed and sealed.

Paraffined paper used for packaging should arrive with the Supplier's seal.

A sample should be taken from each paper lot for testing it for mineral acids, alkalis and salts.

9. PREPARATION OF ENGINE FOR SENDING FOR REPAIR OR TO SUPPLIER UNDER CLAIM SUBMITTED

The engines forwarded to repair or to the Supplier should be fully completed with all accessories according to the engine Log Book and accompanying documents, preserved and packaged according to Section 3 (less Item (19)(b)).

10. REQUIREMENTS FOR ENGINES STORED AT OPEN GROUNDS

Inspect the container with engines, accessories and spares to be stored.

The wooden box should be free from slots, cracks, ruptured roofing paper. Eliminate container defects before placing the engines in open ground storage.

Remove the cover of the packaging container and check condition of the engine film cover, silica-gel indicator and container cover. To preclude damage to the film cover, remove the container cover with a crane or other hoisting appliances.

NOTE: If the cover has a detachable wall, remove it first and then detach the cover.

The polyethylene film cover and its seams should have no mechanical defects (punctures, breaks, etc.).

Inspect the engine outdoors with the film cover removed at an ambient temperature of not below 5 °C. At an air temperature below 5 °C, inspect the engine film cover only in a heated room.

In case of rainfalls, remove the container cover to inspect the film cover only in the storeroom or under a shed.

Check packaging of the units and spares by condition of silica-gel indicator through the inspection ports.

Silica-gel indicator on the engines, accessories and spares to be placed in storage should be blue or violet.

It is prohibited to place the engines in storage outside the storerooms in damaged packaging containers or film covers or with pinky silica-gel indicator.

Repair the covers and replace silica gel according to the effective Instructions.

When moving the engines from open grounds to storerooms, it is prohibited to keep the engines in wet containers.

11. REQUIREMENTS FOR STORAGE GROUNDS

Arrange the engines prepared for storage on specially equipped grounds.

The engine storage grounds should be organized on dry non-flooded areas, cleaned of grass and litter and be provided with drainage facilities.

The grounds should be equipped with special supports to protect the engines against ingress of water and ensure ventilation of the container lower portion. The support height depends on the local climatic and soil conditions but should not be less than 300 mm.

Arrange the containers with engines on the ground so as to allow free access to them for inspection.

When storing the engines on grounds under sheds, the latter should protect the containers with engines against direct sun rays and rainfalls.

The shed may be of any construction and material. The shed construction should provide for drain of water to the drain ducts.

The clearance of at least 50 mm should be left between the boxes placed in storage and the shed.

12. INSPECTION AND CARE OF ENGINES IN STORAGE

Inspect all the containers in storage and check color of silica-gel indicator through the container inspection ports once in three months. When silica-gel indicator turns fully pink, replace silica-gel dehydrator and silica-gel indicator and inspect the film cover.

Replace silica gel and repair the damaged cover indoors according to the effective Instructions. The room temperature should not be below 10 °C.

Clean the engine storage grounds and their drainage system regularly of grass and litter.

At snow thawing, remove snow from and around the containers.

13. FORMALIZING OF TECHNICAL DOCUMENTS IN STORAGE

Enter the following information in the Log Books of engines and accessories and in the inspection Register (for spares and accessories without Log Books):

Date of engine placement in storage.

Results of periodic engine inspections in storage.

Date of repair of the film cover.

Condition of silica-gel indicator and date of silica gel replacement.

24C

Each move of the engines, accessories and spares during the entire storage period from the outdoor storage place to indoor storage and back.

All entries should be made by the head of storage department (section) or senior technician of the department with applying a stamp.

ENGINE M-14P - SHIPMENT

The engine, accessories and spares shipped by motor transport should be in containers covered with tarpaulin or film.

In case of railway shipment, the engine, accessories and spares should be shipped in closed cars carefully cleaned of dust and soil before loading. The cars should be tightly closed.

NEVER use cars where chemicals were shipped.

The engine, accessories and spares should be unloaded on covered decks.

The containers with the engine, accessories and spares arriving at a depot should be cleaned of external dust and dirt and immediately brought to the closed room separated from storage by solid partitions. The engine and spares should be kept in this room till they acquire the room temperature.

The containers without the engine and other items should be kept under conditions excluding the effect of the precipitation (rain, snow, dust, etc.).

After unpackaging the engine, carefully inspect it, wipe the sweated spots dry with a clean cloth and immediately grease the exposed areas.

CAUTION: WHEN OPENING AND INSPECTING THE ENGINE, NEVER TOUCH ITS PARTS WITH UNGLOVED HANDS.

072.10.00

ENGINE FRONT

ENGINE FRONT - DESCRIPTION AND OPERATION

1. GENERAL

The engine front comprises gearbox (Ref. Fig. 1), gearbox housing (10) (Ref. Fig. 2) accommodating airscrew shaft (1) and the planetary train.

The engine gearbox is intended to reduce the crankshaft speed to the airscrew shaft speed.

The required airscrew speed is obtained by using a spur gear planetary train between the crankshaft and the airscrew shaft (Ref. Fig. 1).

The gearbox increases engine power by increasing crankshaft speed while maintaining moderate peripheral velocity of the airscrew blades. At take-off rating the crankshaft rotates at a speed of 2900 r/min while the airscrew makes 1908 r/min.

When the crankshaft rotates, drive gear ring (17) (Ref. Fig. 2) turns satellites (15). Meshing with sun gear (29) of the gearbox, the satellites roll around it and move the airscrew shaft in the direction of crankshaft rotation.

The M-14P engine gearbox transmission ratio is 0.658.

The gearbox housing carries the airscrew speed governor. The speed governor drive is located on the bracket of the crankshaft thrust bearing front cover.

2. CONSTRUCTION

2.1. GEARBOX HOUSING

Gearbox housing (10) (Ref. Fig. 2) is adapted to accommodate the gearbox parts and is cast of magnesium alloy ML-5. It is a truncated cone attached to the engine intermediate crankcase with its rear flange by means of studs driven into the intermediate crankcase front part.

The gearbox housing takes up load created by the airscrew and transmits it to the crankcase attachment units and engine frame.

The front part of the housing has a hub with an outer flange with fourteen bosses receiving thirteen threaded studs and three milled flats for the thrust bearing front cover puller. Nine studs are used to secure cover (6) of radial ball bearing (8) of airscrew shaft (1) and four studs attach the inner ring of the engine cowling louvers.

The lower boss has a through inclined hole transforming into an open passage for draining oil from the cover space of the airscrew shaft radial ball bearing.

Bushing (7) for mounting the airscrew shaft ball bearing is press-fit in the front bore of the hub. Mounted on the front flange of the housing is ball bearing cover (6) whose aligning collar doubles as a front stop for the ball bearing.

Steel cover (6) has a flange with nine holes for installing on the housing studs and an annular recess on the flange side. Disposed between the ball bearing and the cover aligning collar is steel oil baffle (4). A paronite gasket is arranged between the cover and the housing. Sealing rubber collar (3) is installed in the central bore of cover (6).

Steel bushing (11) is pressed in a hole turned in the housing hub concentrically with the radial ball bearing seat. The inner surface of the bushing carries oil sealing rings (32). The bushing is fixed by set screw (27) driven into the gearbox housing hub. The screw is safetied with a plate lock.

Driven into the gearbox housing hub threaded hole is a jet for lubricating the radial ball bearing of the airscrew shaft.

Made in the middle inner part of the housing are bores and a flange with bosses for mounting and securing hub (12) of the gearbox sun gear. Screwed into each boss is a steel threaded bushing with left-hand thread. Hub (12) is secured to the housing flange by bolts (13) driven in the threaded bushings.

The housing lower part has a flange with a central hole and four threaded holes receiving threaded bushings for mounting the bellows. The bellows is used to drain oil from the gearbox housing through a circular central hole of the flange to the oil sump.

A boss with a flange and four studs for attachment of the airscrew speed governor is made on the outside upper RH part of the gearbox housing. A through hole is made in the flange to pass the shank of the speed governor drive shaft; an inclined lateral hole is intended to drain oil from the speed governor.

Provided in the upper LH part of the gearbox housing is a boss with a machined flange having a through hole and two studs for attachment of auxiliary blanking cover (24) of the gearbox breather.

The housing has two bosses with holes serving as passages to supply oil from the engine main gallery to the speed governor and from the governor to the airscrew.

These passages interconnect two holes on the speed governor mounting flange and two respective holes in the oil sealing ring bushing.

The passage supplying oil from the engine main gallery to the speed governor features a boss with a threaded hole receiving steel adapter bushing (22), fixed against turning with a retainer. Oil mesh filter (23) is driven into the adapter bushing. The filter comprises two parts: a casing and a mesh brazed to it. A fiber gasket is placed between the filter casing and the adapter bushing end face. The filter is safetied with a spring lock.

The passage for supplying oil to the airscrew speed governor is connected to an additional passage drilled in parallel with the gearbox housing center line and further through the oil transfer bushing to the middle part of the crankcase for lubricating the valve mechanisms of the cylinder head cases.

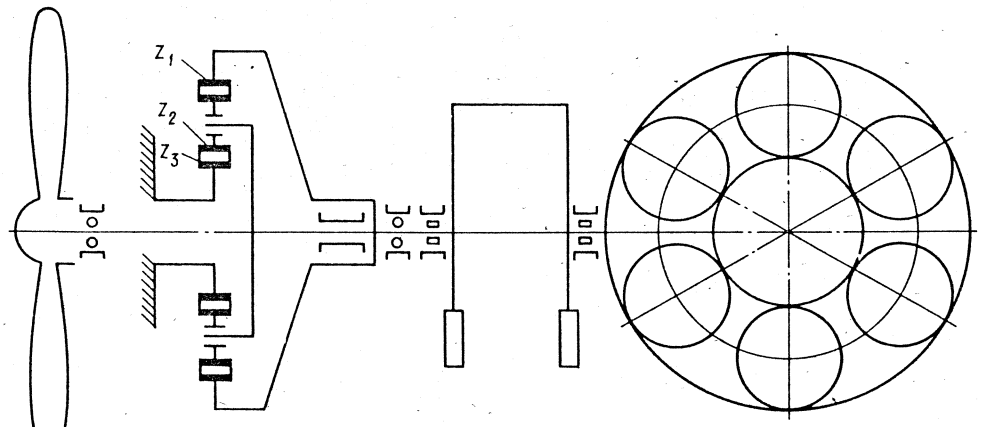

Z_1 - number of drive gear ring teeth
Z_2 - number of satellite teeth
Z_3 - number of sun gear teeth

Gearbox Power Train

Figure 1

2.2. AIRSCREW SHAFT

Airscrew shaft (1) (Ref. Fig. 2) is made of heat-treated high-grade alloyed steel. The hollow shaft has at its front end a round flange with end face splines and six holes for airscrew attachment bolts.

The shaft is installed with its rear cylindrical shank in the bushing of the crankshaft front end bearing the rear support for the airscrew shaft.

Arranged on the outer cylindrical surface of the airscrew shaft are steel bushing (2), sealing collar (3), oil baffle (4), radial ball bearing (8), thrust ring (9) and spacer (31). The spacer carries bushing (11) of oil sealing rings with rings (32).

Satellite cage (28) is installed on the airscrew shaft longitudinal splines.

Three splines of the airscrew shaft has longitudinal grooves to supply oil to satellite pivots.

All these parts are braced by nut (20) and are safetied with a lock which is secured to the nut by screw (21).

Two holes are drilled on cylindrical portions of the airscrew shaft for transfer of oil to the airscrew hub and back through the speed governor to the engine oil system.

Aluminium plug (33) is pressed into the front end of the airscrew shaft hollow. The plug has a hole communicating with the airscrew shaft hole. The hole serves to supply oil from the speed governor to the airscrew hub. The longitudinal slot in the plug rear part communicates the airscrew shaft hollow with the rear annular space of oil sealing ring bushing (11).

The oil supply holes of the plug and airscrew shaft are aligned by the match marks. Three set screws extending through threaded holes in the front part of the airscrew shaft and holes in the plug secure the latter in a strictly definite position relative to the shaft.

Steel adapter bushing (34) is pressed into the oil supply hole from the plug front side.

The oil supply system of the gearbox ensures one-passage operation of the airscrew.

The airscrew shaft plug internal thread is intended to connect the airscrew oil line.

Steel spacer (31) has a copper plated inner surface. The spacer is provided with two oil supply holes whose ends brought to the inner surface have semi-circular depressions to compensate for partial misalignment between the holes of the airscrew shaft and the spacer. Provided at the rear part of the spacer is an inner collar with splines for fixing it on the airscrew shaft.

The steel oil sealing ring bushing is floating along the spacer and is intended to transfer oil to the speed governor and airscrew through the appropriate oil passages in the airscrew shaft and crankcase.

Two inner annular grooves with elongated holes serve to pass oil flowing to the airscrew through the speed governor and back.

Three annular grooves for cast iron oil sealing rings are made on the outer surface of the bushing. Each groove receives two rings.

Oil sealing rings (32) rest on the inner surface of the steel bushing pressed in the gearbox housing.

The oil seal bushing is free fit in the bushing of the crankcase front end. To align oil supply holes, the bushing is fixed through its round hole with set screw (27) driven into the threaded hole of the gearbox housing and safetied with a plate lock.

A thin layer of babbit is applied to the inner working surface of the bushing.

Thrust ring (9) is made of steel and has four oil slots uniformly arranged on the front side opposite to the chamfer.

Radial ball bearing (8) is the front support of the airscrew shaft and takes up the airscrew loads.

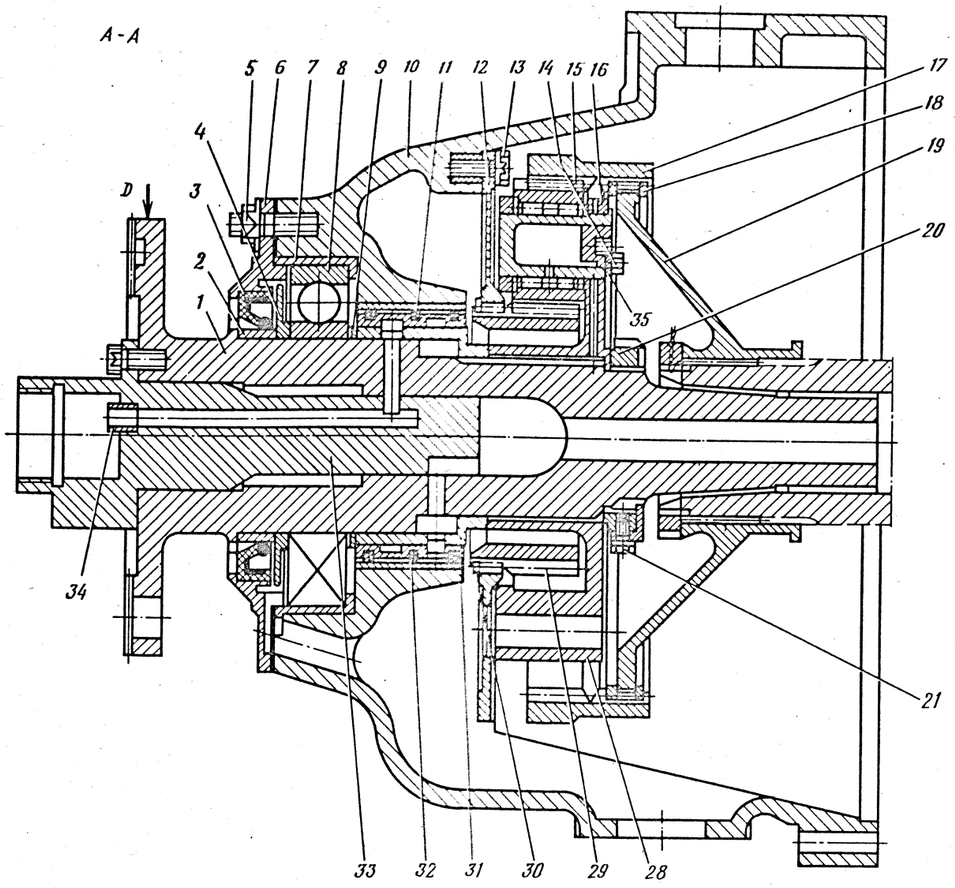

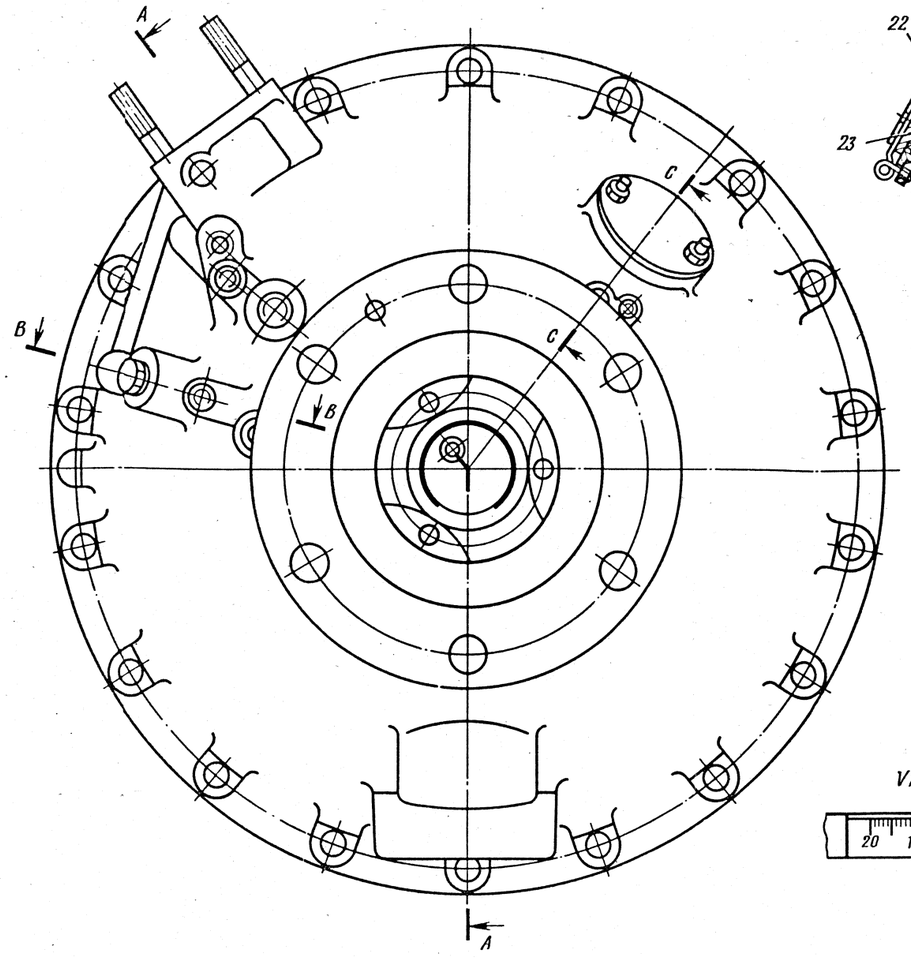

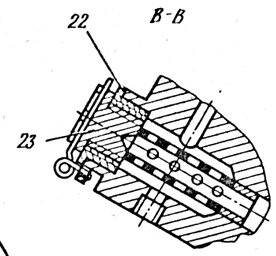

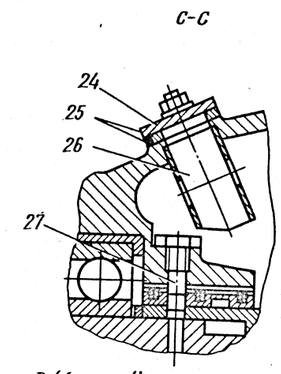

View D (turned)

1. Airscrew Shaft
2. Bushing
3. Sealing Collar
4. Oil Baffle
5. Nut
6. Cover
7. Bushing
8. Ball Bearing
9. Thrust Ring
10. Housing
11. Oil Sealing Ring Bushing
12. Sun Gear Hub
13. Bolt
14. Screw
15. Satellite
16. Satellite Pivot
17. Drive Gear Ring
18. Retaining Ring
19. Drive Gear Ring Hub
20. Nut
21. Screw
22. Bushing
23. Oil Line Filter
24. Blanking Cover
25. Gasket
26. Breather Mesh
27. Set Screw
28. Satellite Cage
29. Sun Gear
30. Retaining Ring
31. Spacer
32. Oil Sealing Ring
33. Aluminium Plug
34. Adapter Bushing
35. Locking Strip

Engine M-14P Gearbox. Longitudinal Section View

Figure 2

Oil baffle (4) is made of steel. It is intended to restrict flow of oil to oil sealing collar (3) of the airscrew shaft.

The rubber oil sealing collar with metal insert is intended for sealing the airscrew shaft. Oil flows from the radial ball bearing cover space and through the hole in the crankcase front end to the crankcase space. To preclude wear of the airscrew shaft, steel bushing (2) is arranged under the sealing collar working lip.

Radial ball bearing cover (6) is installed in the front bore of the gearbox housing, is attached by nine studs and serves to press the ball bearing to the gearbox housing and take up axial load of the airscrew.

2.3. GEARBOX PLANETARY TRAIN

The gearbox planetary train comprises the following main parts: drive gear ring (17) mounted on hub (19), gearbox sun gear (29), six satellites (15) installed in satellite cage (28) on pivots (16).

Drive gear ring (17) is made of high-grade steel in the form of internally toothed ring; the teeth mesh with the satellites.

The drive ring have teeth with portions of decreased height serving as splines for mating the ring with the hub and two grooves for retaining rings.

The splined joint of the drive gear ring and the hub has clearances between splines which allows the ring to self-align with the satellite gears.

Drive gear ring hub (19) is made of high-grade steel integrally with the splined bushing having involute splines by which the hub is fitted to the crankshaft front end. External cemented splines are made on the hub for coupling with the drive gear ring. Drive gear ring steel retaining rings (18) are of a rectangular cross section; they are installed in the drive gear ring annular grooves and serve to limit its axial displacement in the hub.

Sun gear (29) of the gearbox comprises hub (12) with internal involute splined and retaining ring (30).

The sun gear is made of high-grade steel. Gear tooth portions of reduced height serve for splining it on the hub. The gear splined joint with the hub has a clearance between splines for self-aligning on the satellite teeth.

The annular recess made on the gear splines is intended to receive the retaining ring. The gear teeth are cemented.

The steel hub of the sun gear is a disk with internal involute splines. Fifteen holes uniformly spaced around the hub flange are designed to receive bolts (13) for attachment of the hub to the crankcase front and smaller adjacent holes are used to receive plate lock tabs for safetying the bolts.

Four holes in the hub disk are intended to breath the crankcase front end space and decrease weight of the part.

Steel resilient retaining ring (30) is of a rectangular cross section and it intended to limit longitudinal displacement of the gear along the hub.

Gearbox satellites (15) are cemented-tooth gears with an internal cylindrical hole serving as a support surface for a needle roller bearing. Aligning circular recesses for thrust washers are made on both sides of the satellites.

Satellites rotate on double-row needle roller bearings having 33 rollers per row each. The rows are separated by a ring. When assembling the bearings, the rollers are divided into two groups with a diameter difference of up to 0.005 mm.

Rollers of only one group are installed in one bearing; changing separate rollers between the bearings is not allowed.

Satellite pivots (16) are hollow pins with a solid rear wall. They are made of high-grade steel and are interchangeable. The outer cylindrical surface of the pivot has steps of three different diameters to simplify installation and protect against scores in re-pressing.

The pivots are pressed with outer copper-plated necks into the satellite cage holes, the satellite rotates on the middle neck of the pivot.

Provided on the pivot on the larger neck side is a collar limiting longitudinal displacement of the pivot. Two holes are drilled to the cylindrical surfaces of the pivot. The hole with groove is intended to supply oil to the pivot space; another hole made in the middle part of the pivot supplies oil to the needle roller bearing of the satellite. An aluminium plug with a threaded hole for the puller is pressed in a special bore in the pivot end. Locking strip (35) pressed to the flat on the pivot collar and is secured by two screws (14) to the satellite cage is intended to prevent the pivot against turning and longitudinal displacement. The screws are locked with wire.

Satellite cage (28) is made of steel in the form of a hexagonal box with a hub integrated with one lateral wall and six side ports for satellites and six holes for satellite pivots.

Holes for decreasing cage weight are drilled in the bridges between the ports. The hub has rectangular splines for fitting the satellite cage onto the airscrew shaft. Milled flats are made at the spline ends on the solid wall side and the wall is provided with six oil passages to supply oil to the needle roller bearings of the satellites. To secure locking strips of the satellite pivots, the solid side wall has twelve threaded holes.

2.4. SPEED GOVERNOR DRIVE

The speed governor drive (Ref. Fig. 3) is located on the bracket of front cover (3) of the crankshaft thrust bearing.

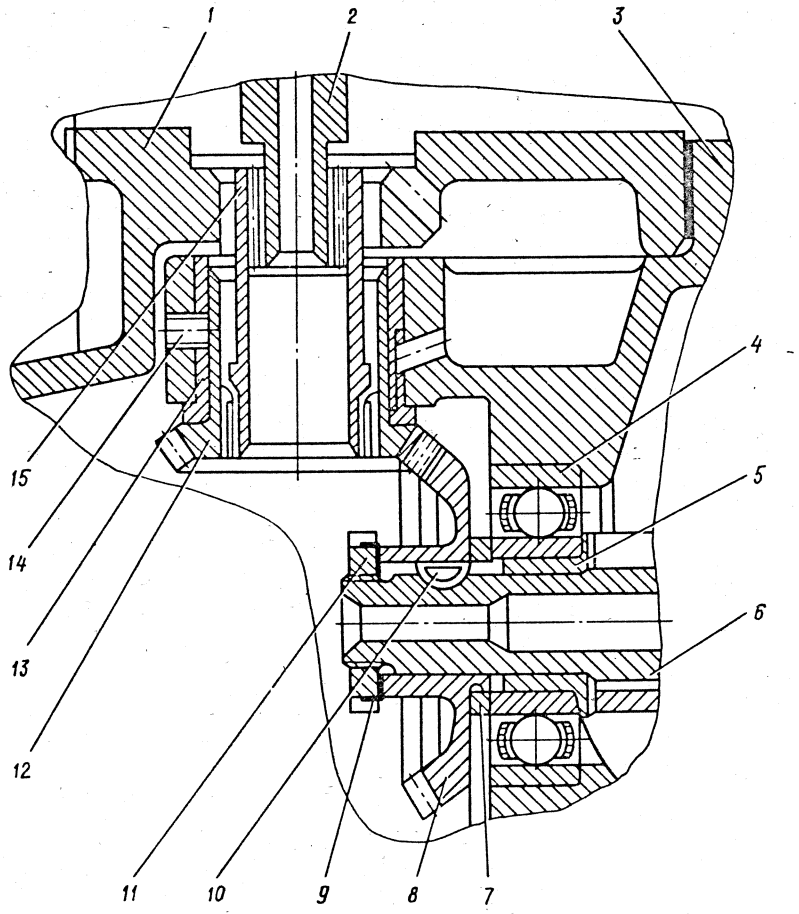

1. Gearbox Housing
2. Speed Governor Shank
3. Crankshaft Front Thrust Ball Bearing Cover
4. Ball Bearing
5. Bushing
6. Intermediate Timing Shaft
7. Adjustment Washer
8. Speed Governor Drive Bevel Gear
9. Lock
10. Woodruff Key
11. Nut
12. Speed Governor Driven Gear
13. Bushing of Thrust Ball Bearing Front Cover
14. Retainer
15. Speed Governor Coupling

Speed Governor Drive

Figure 3

Arranged on timing intermediate shaft (6) by Woodruff key (10) is drive bevel gear (8) of the speed governor drive, made of cemented steel. The drive gear meshes with driven gear (12) of the speed governor drive.

The driven gear is made of cemented steel and transforms into a hollow shank, with internal splines. The shank rotates in vertical bushing (13). Drive gear (8) of the speed governor drive precludes the driven gear from dropping out from the bushing.

Coupling (15) of the speed governor drive is connected with internal splines of driven gear (12). The coupling is made of cemented steel as a hollow shaft.

One end of the coupling is internally splined for mating with shank (2) of the speed governor. The coupling shank is arranged in a hole provided on the pad for the speed governor on the crankshaft front end.

The outer surface of the coupling has a collar to thrust against the inner splines of the gear which preclude the coupling from dropping out.

072.20.00

CRANK MECHANISM ASSEMBLY

CRANK MECHANISM ASSEMBLY - DESCRIPTION AND OPERATION

1. GENERAL

The crank mechanism assembly of the engine comprises a front cover of the crankshaft thrust ball bearing (Ref. Fig. 1) and intermediate crankcase (Ref. Fig. 2) which accommodates crankshaft (Ref. Fig. 5) and connecting rod assembly (Ref. Fig. 6) parts.

The front cover of the crankshaft thrust ball bearing and the intermediate crankcase take up various forces acting on the crank mechanism in operation.

The crankshaft with connecting rods convert work of reciprocating pistons into rotary energy of the airscrew. Besides it causes piston travel during non-working strokes and actuates the timing mechanism, blower and accessories mounted on the engine.

2. CONSTRUCTION

2.1. CRANKSHAFT THRUST BEARING FRONT COVER

The front cover (Ref. Fig. 1) is cast of magnesium alloy in the form of a truncated cone whose larger base transforms into an annular flange with holes for studs intended to secure the cover to the intermediate crankcase. The flange has two shoulders: the front shoulder is used to align the gearbox housing and the rear to align the cover on the front part of the intermediate crankcase.

Pressed in one hole of the flange is an adapter bushing for supply oil from the gearbox housing to the guide bushings of the upper cylinder tappets. The cover has a boss at its center for pressing in steel holder for the crankshaft ball bearing. The holder is locked with three retainers. The boss has a flange at the front with three studs for attaching the ball bearing steel washer. The seat collar is the rear abutment surface for the ball bearing.

Made in the front part of the cover top is a bracket supported by two stiffening ribs. The bracket has a hole where a bronze bushing is pressed to serve as a bearing for the bevel gear of the speed governor drive. The bushing is secured against turning with a retainer. Oil is fed to the bushing from the pocket in the bracket through two drilled passages.

Made in the front part of the cover is a boss with pressed-in steel bushing for the ball bearing of the timing mechanism intermediate shaft. The bushing is fixed with two retainers.

A horse-shoe shaped lug on the rear part is intended to mount timing drive gears. The timing cover is attached by studs to the lug flange.